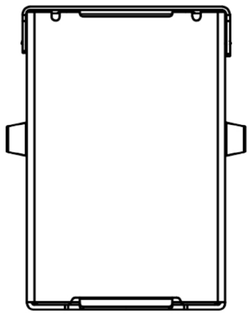

Pin #	SIGNAL NAME	DESCRIPTION	MATING SEQUENCE
1	VBUS	POWER	SECOND
2	D-	USB 2.0 DIFFERENTIAL PAIR	THIRD
3	D+		
4	GND	GROUND FOR POWER RETURN	SECOND
5	StdA_SSRX-	SUPERSPEED RECEIVER DIFFERENTIAL PAIR	LAST
6	StdA_SSRX+		
7	GND_DRAIN	GROUND FOR SIGNAL RETURN	
8	StdA_SSTX-	SUPERSPEED TRANSMITTER DIFFERENTIAL PAIR	
9	StdA_SSTX+		
Shell	Shield	CONNECTOR METAL SHELL	FRIST

Material
Housing Material: LCP, UL94V-0, blue
Contact Terminal: Brass
Metallic Shell:Brass
Plating
Underplating: Nickel
Contact Plating: 1μ'' Gold
Solder Tail: 100μ'' Min. Tin
Metallic Shell: Nickel
Electrical
Voltage Rating: 100 V AC
Current Rating: 1.5A
Contact Resistance: 30mΩ Max.
Insulation resistance: 1000MΩ Min.
Dielectric withstanding voltage: 100V AC/Minute
Mechanical
Durability: 1500 cycles
Mating Force: 35N (3.57Kgf) Max
Unmating Force: 10N (1.02Kgf) Min. initial, 8N min after test
Environmental and Processing
Operating Temperature: -40°C to +85°C

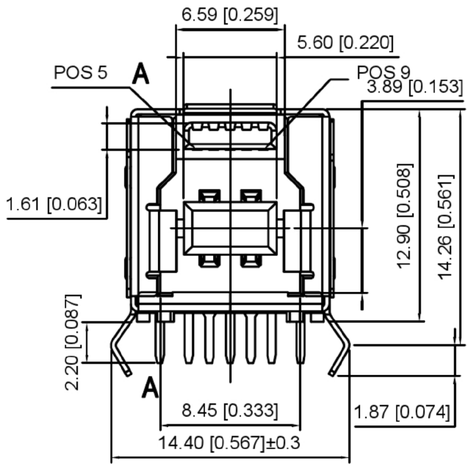

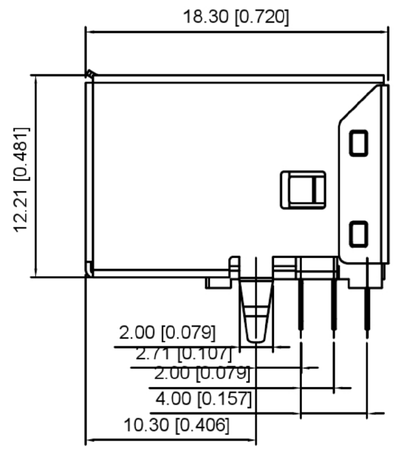

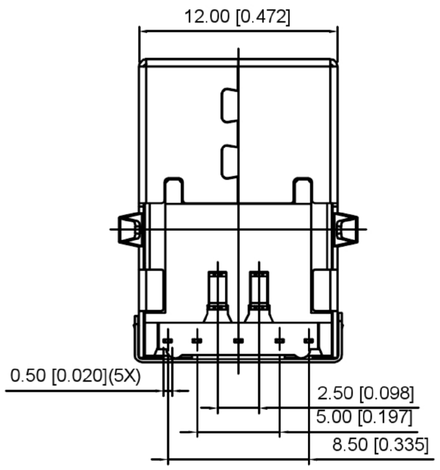

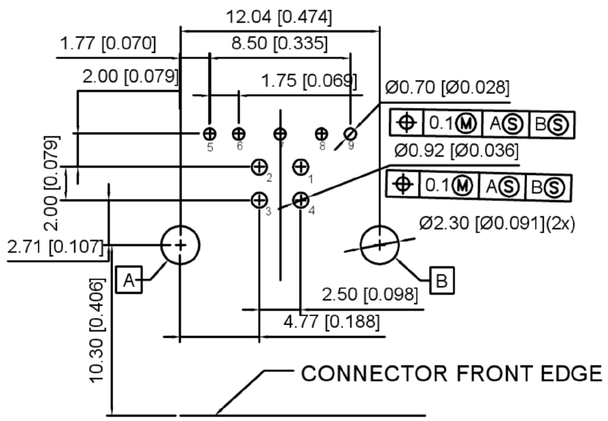

RECOMMANDED PCBA LAYOUT

U235-09XN-4BLRC16-2

1:Au 1U''
5:Au 15U''
6:Au 30U''
T:TIN
N:NICKEL

				ANGLAR	±5°
				L≤ 4	±0.2
				4<L≤ 16	±0.3
				16<L≤ 63	±0.4
	DATE	REVISED	APPROVED	L> 63	±0.5
REVISIONS				UNSPECIFIED TOLERANCES	

www.alpsr.com www.gdxjdz.com www.xbswitch.com

DSND		SCALE: N/A	MODEL TYPE: USB 3.0
DWN		VIEW:	PART NO.:
CHKD		UNIT: mm/in	DWG NO.: U235-09XN-4BLRC16-2
APPD		SIZE: A4	

DONG GUAN XI BANG ELECTRONIC CO., LTD

WEIGHT	SHEET	REVISION
	1/1	A0